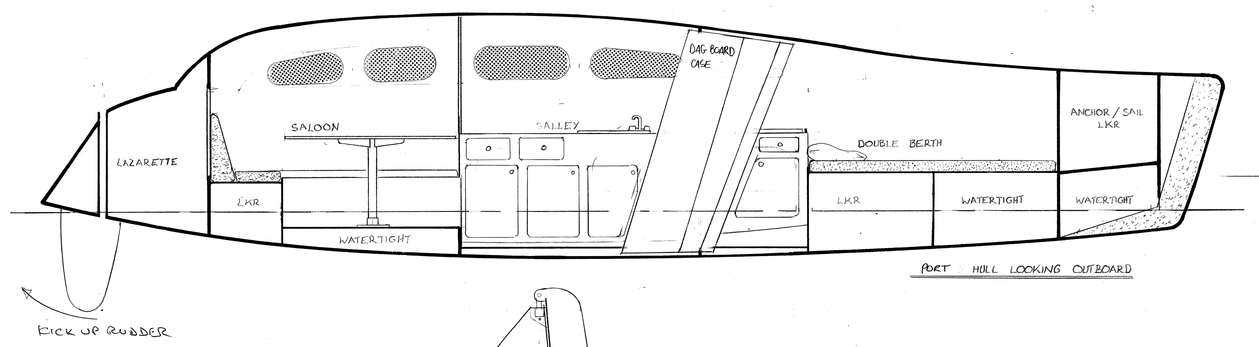

PORT HULL LOOKING OUTBOARD

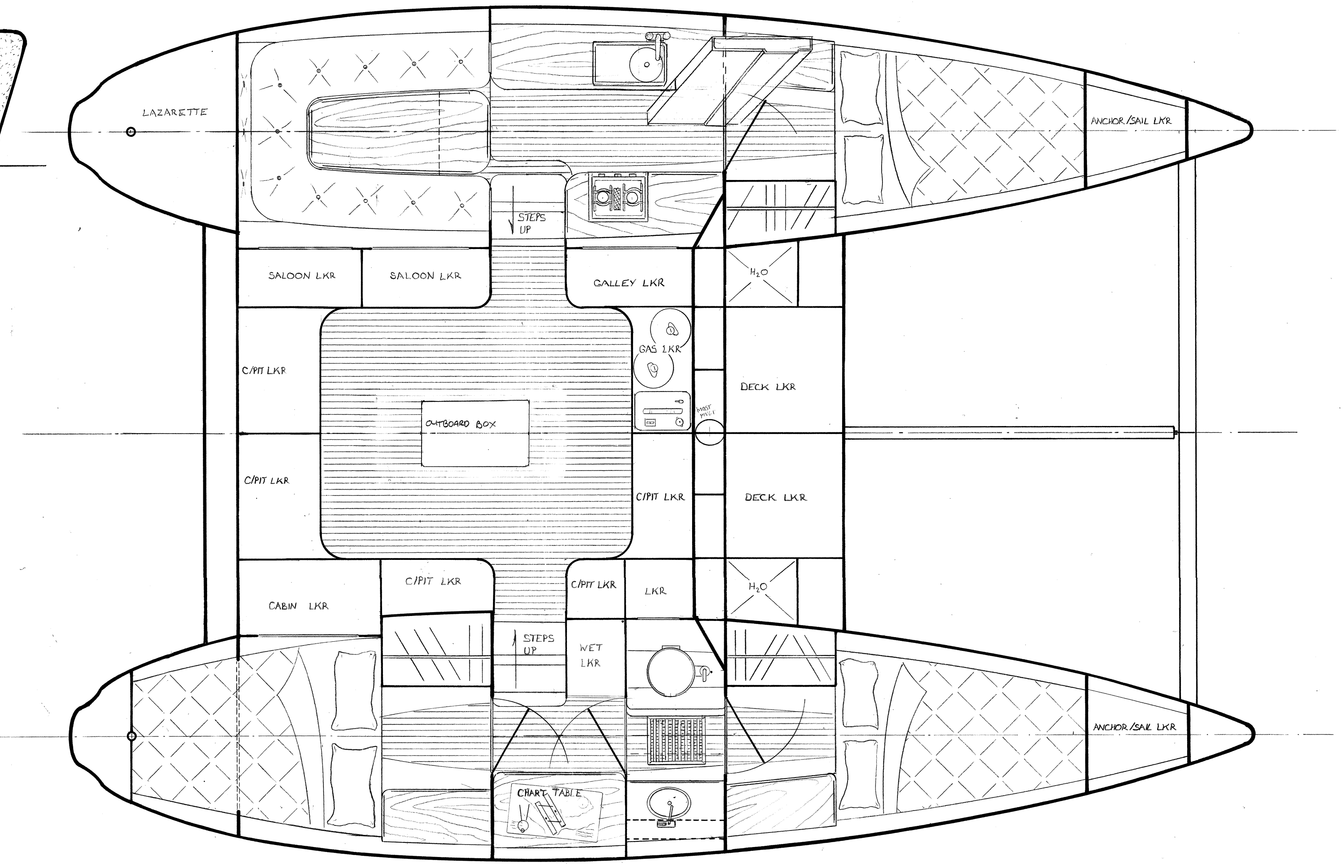

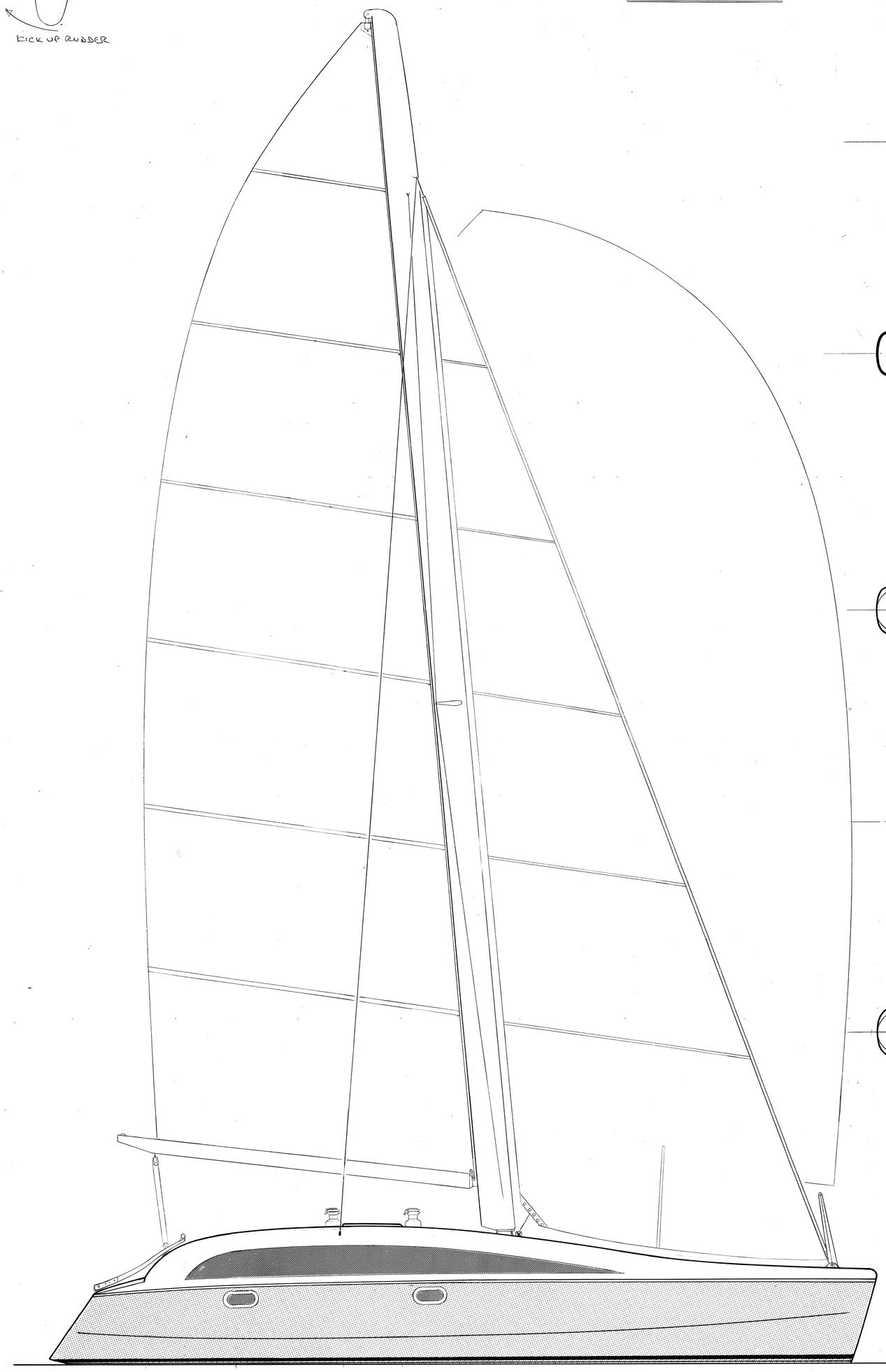

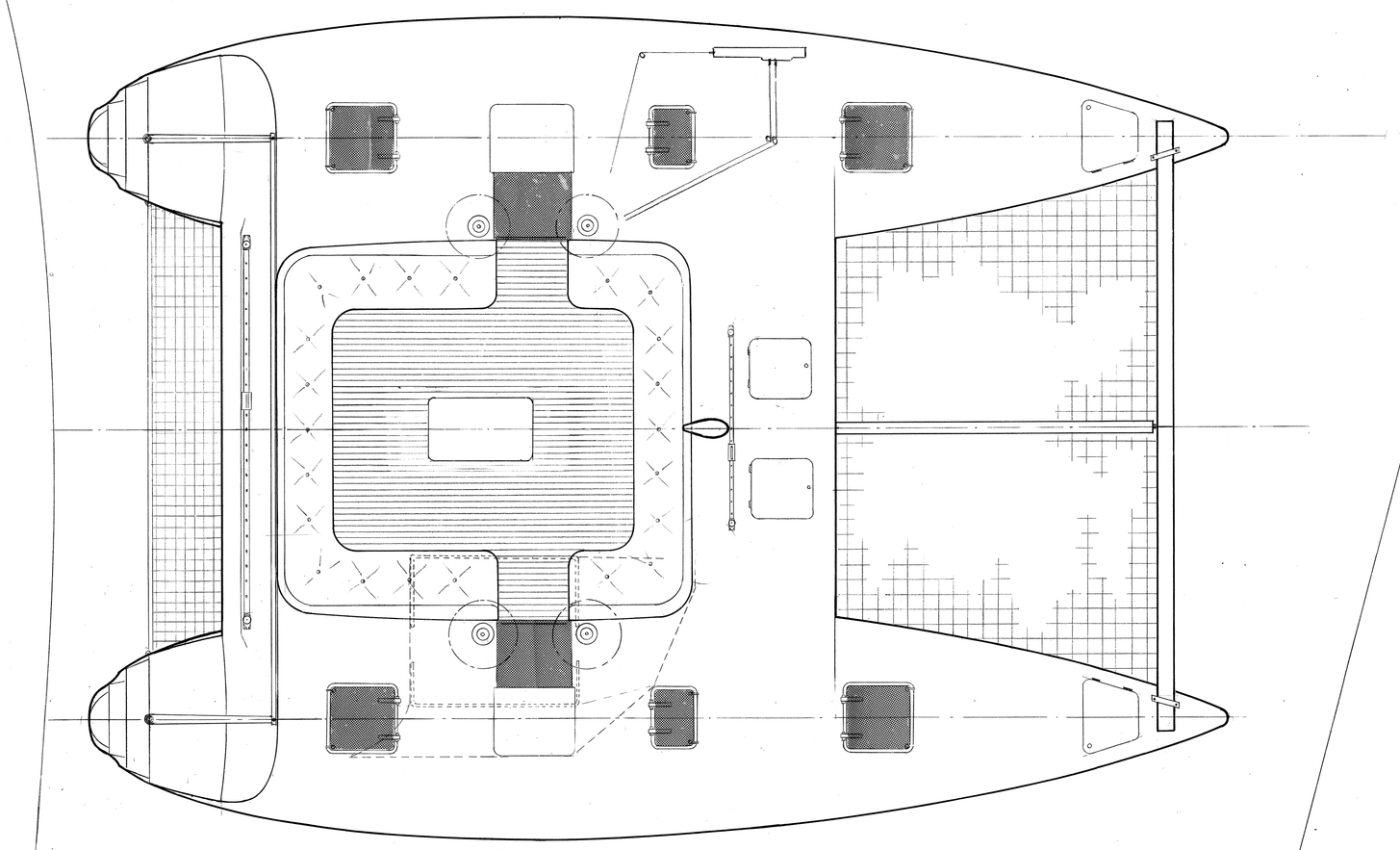

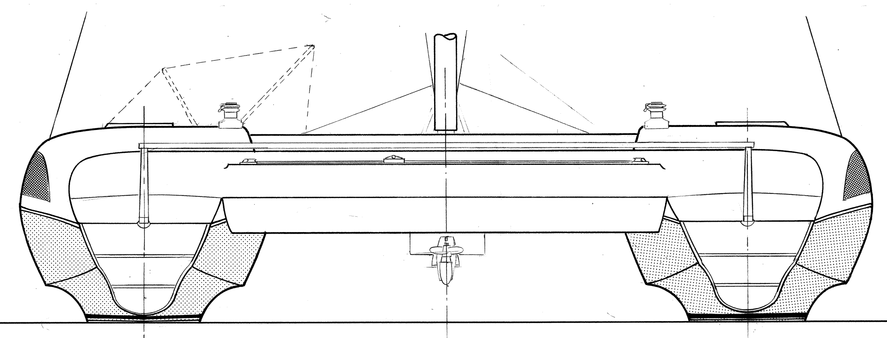

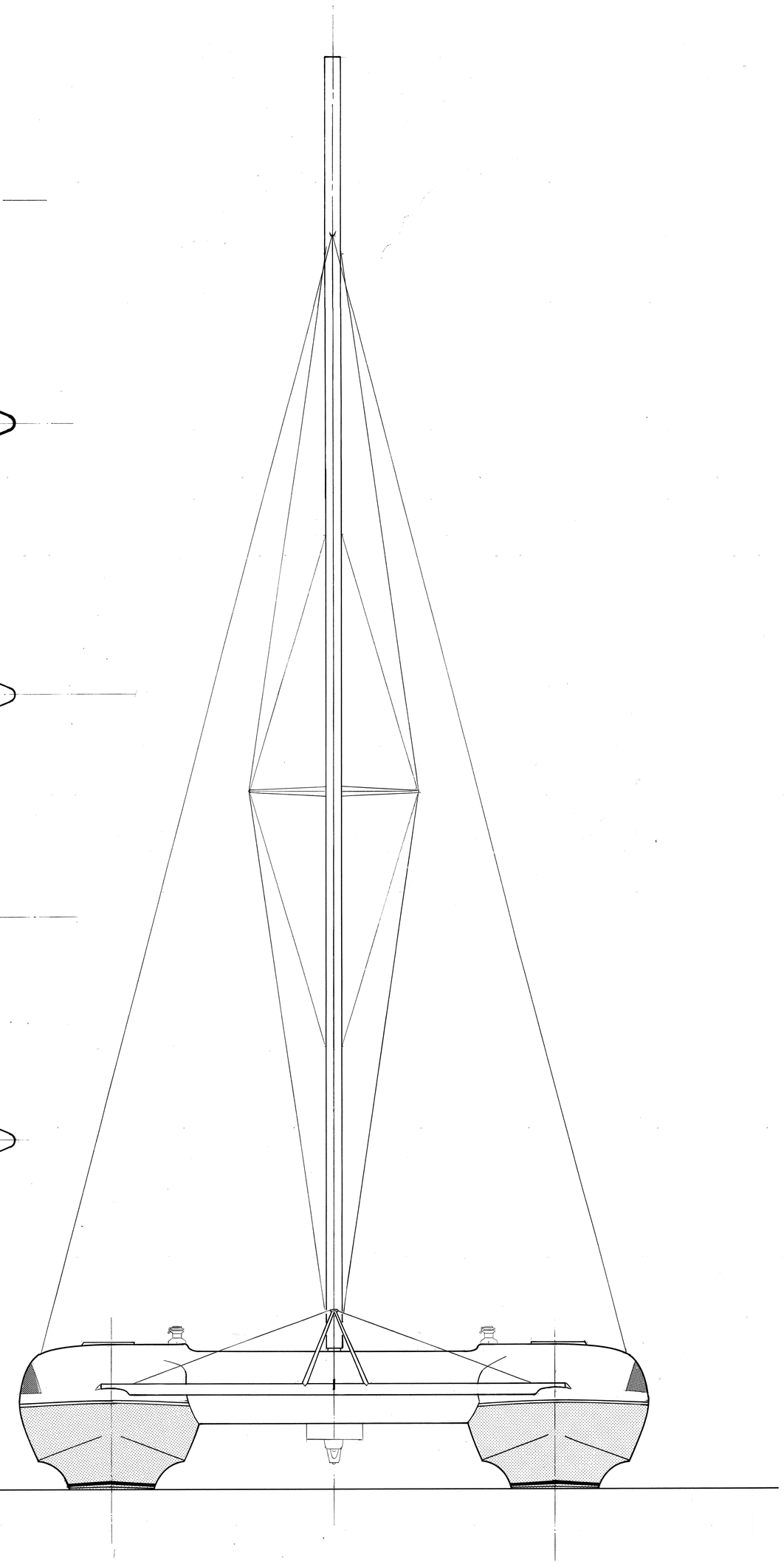

JOHN SHUTTLEWORTH YACHT DESIGNS LTD © 1989

31 ft SHUTTLE CAT

SCALE 1: 25

LOA 9·45m (31ft) LWL 8·88m (29·1 ft) BOA 6·80m (22·3ft) SAIL AREA 56·1 m² (604 ft²)