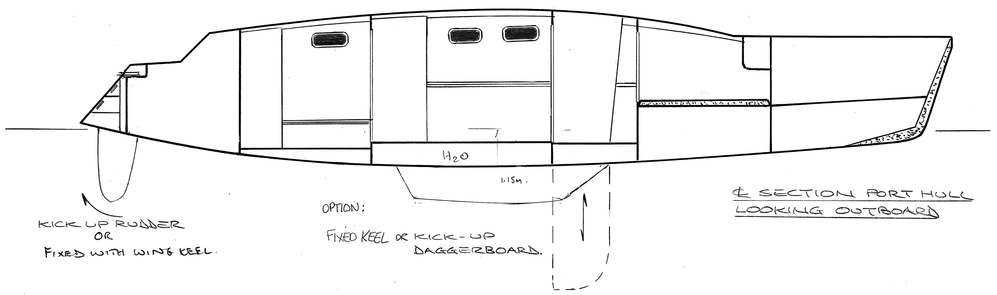

℄ SECTION PORT HULL
LOOKING OUTBOARD

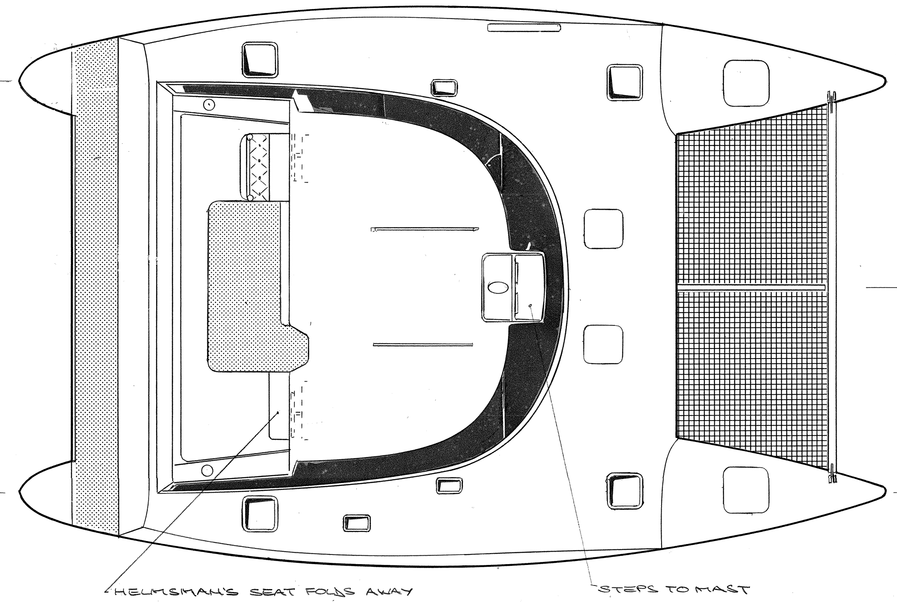

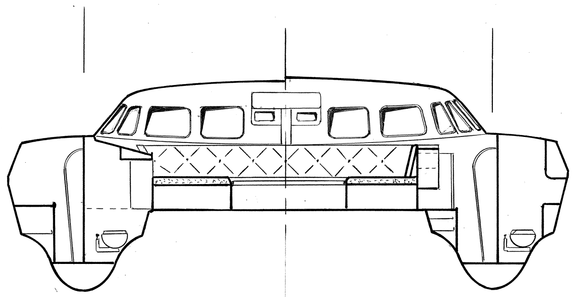

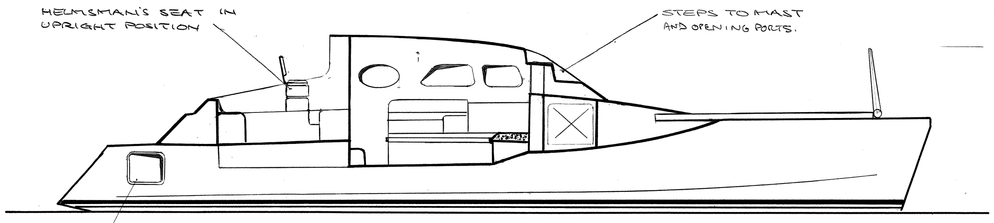

℄ SECTION
LOOKING TO PORT

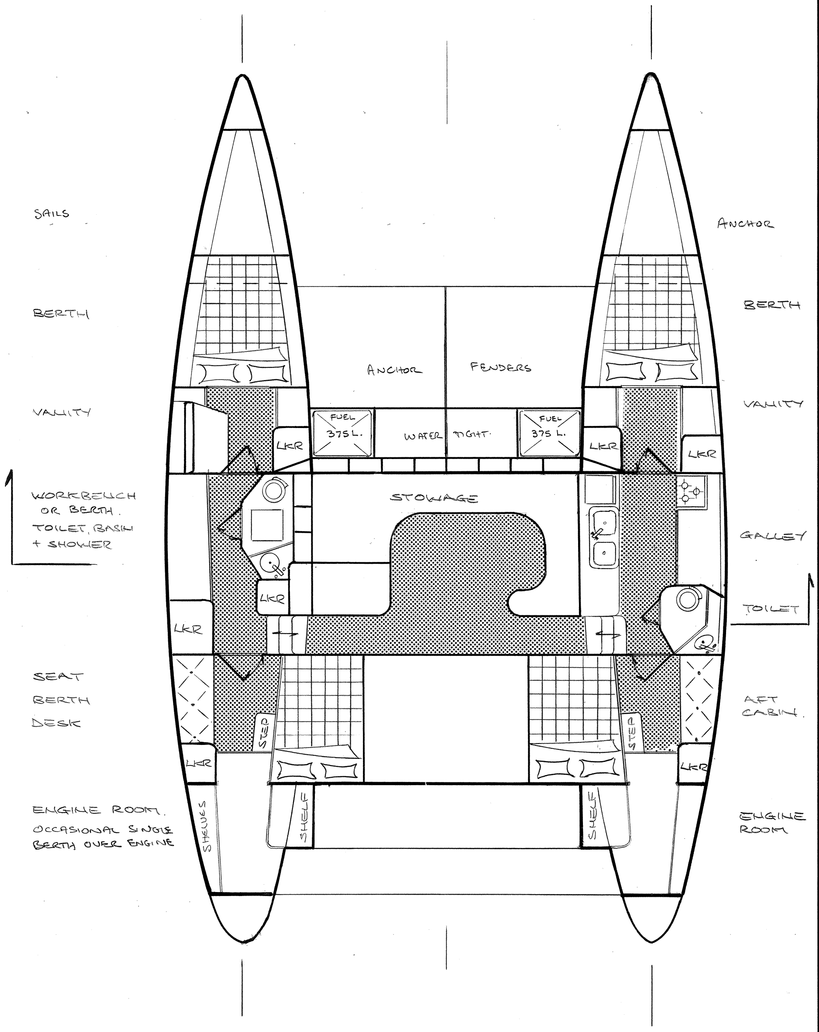

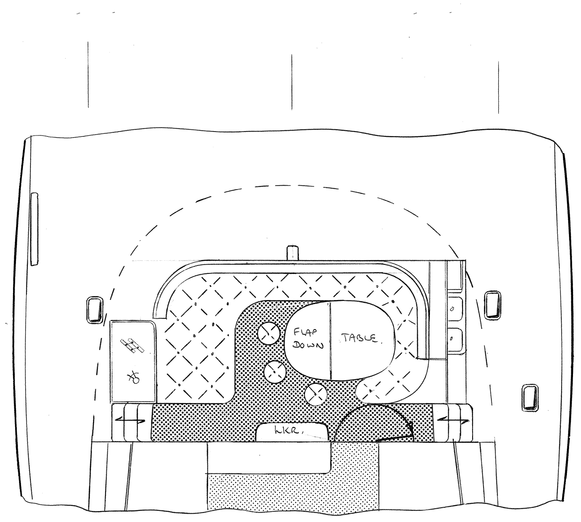
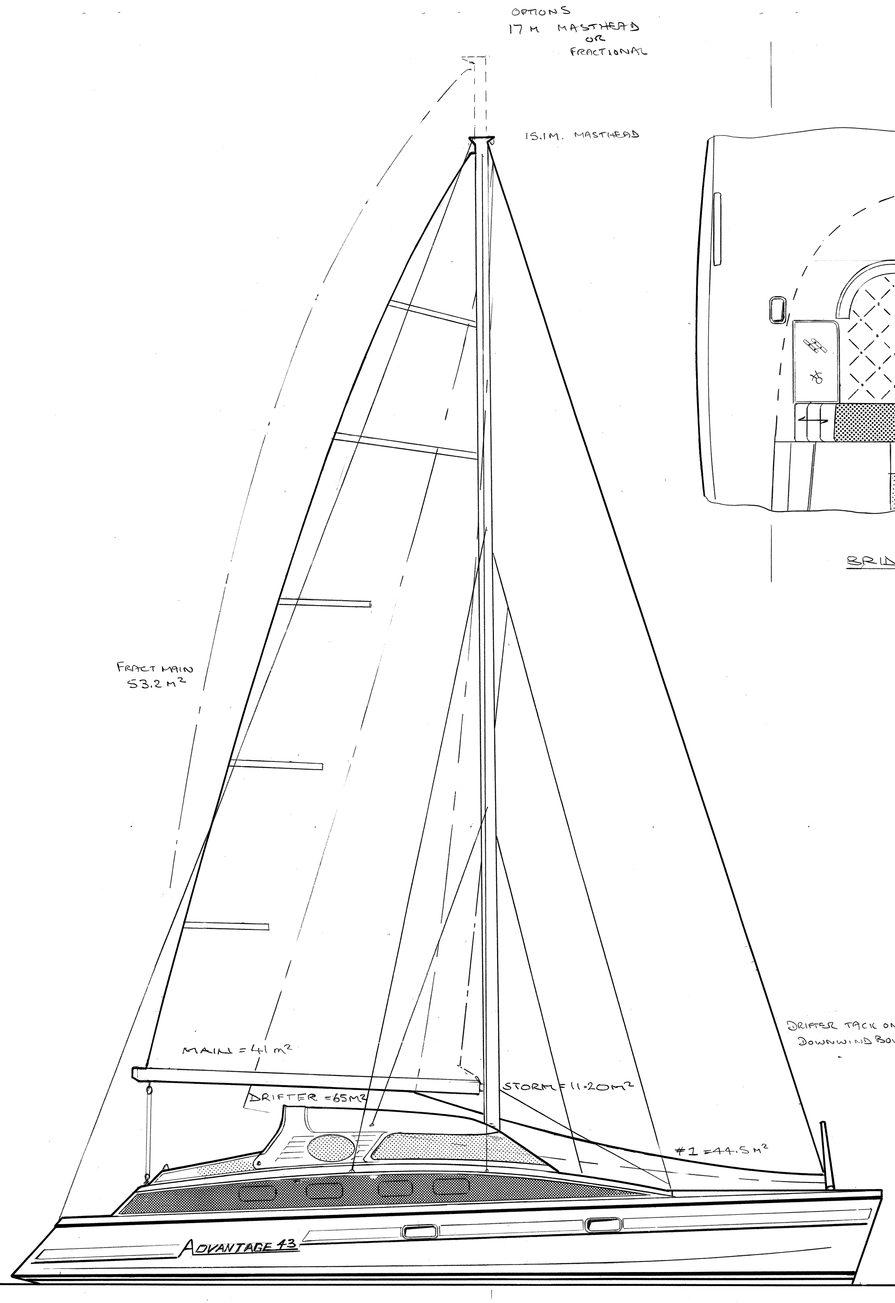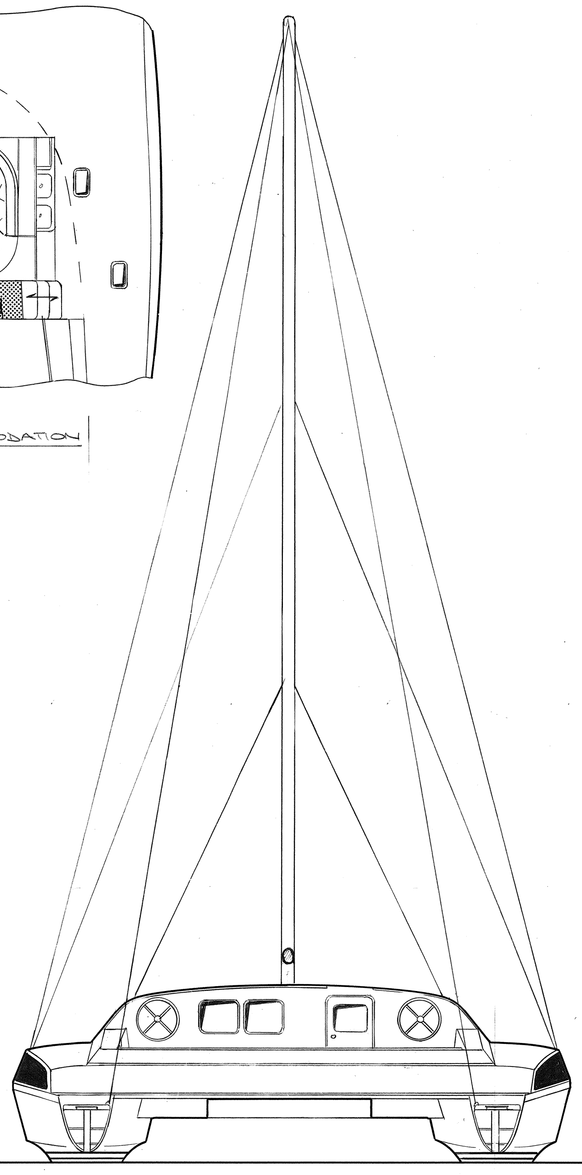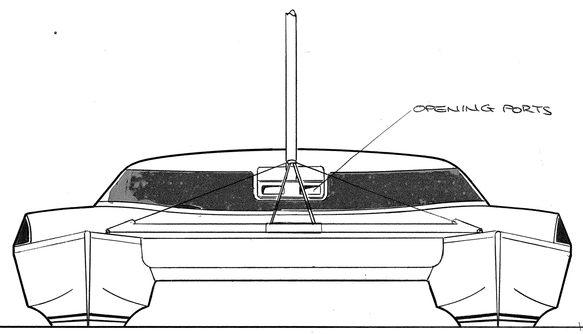
BRIDGE DECK ACCOMMODATION